IMPROVNING LIFE WITH BIOCENTRIC LIGHTING™

2022

BIOCENTRIC LIGHTING™

PRODUCT CATALOG

PATENTED LIGHT SYSTEMS FOR
HEALTH & WELL-BEING

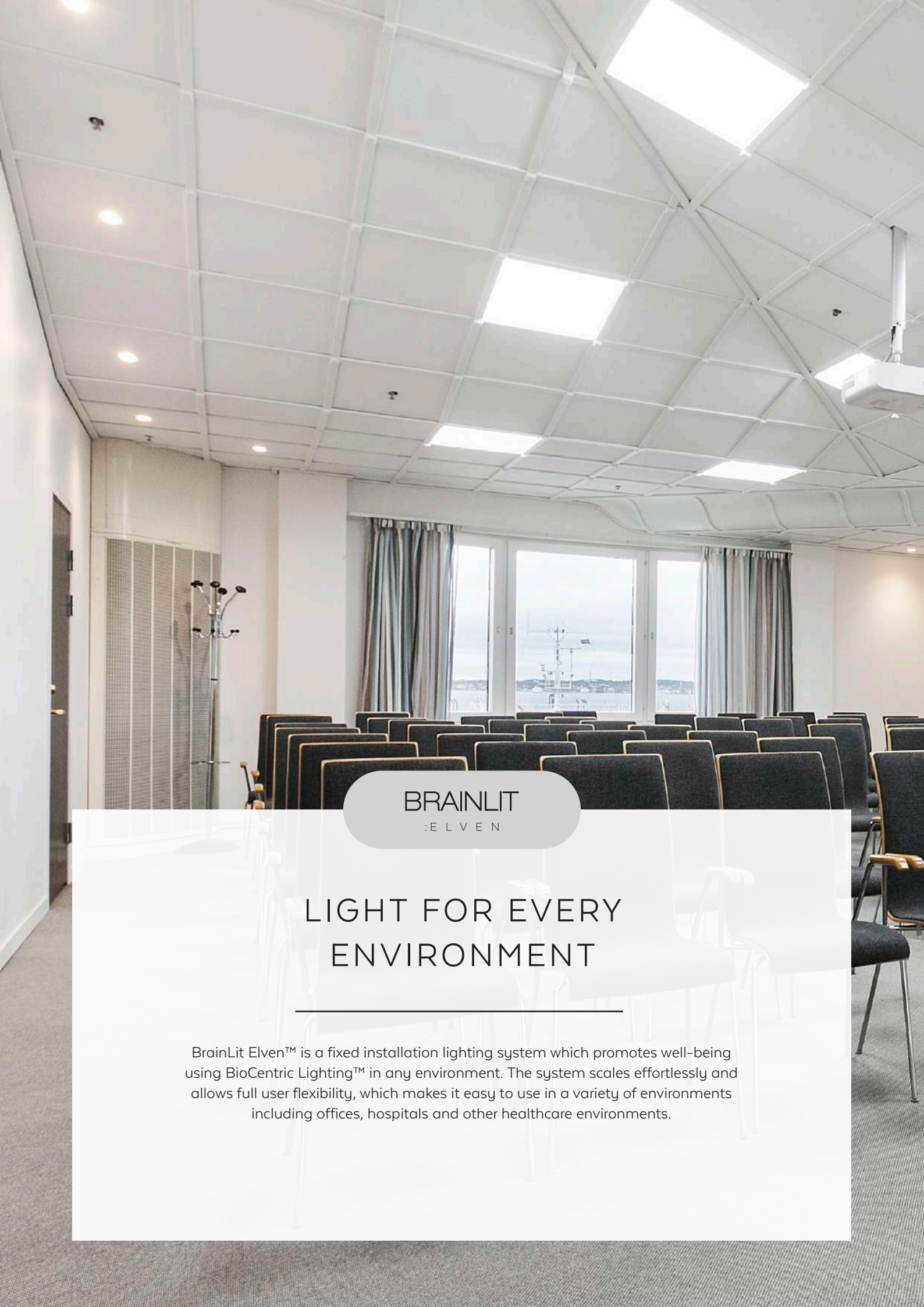

BRAINLIT
:ELVEN

LIGHT FOR EVERY ENVIRONMENT

BrainLit Elven™ is a fixed installation lighting system which promotes well-being using BioCentric Lighting™ in any environment. The system scales effortlessly and allows full user flexibility, which makes it easy to use in a variety of environments including offices, hospitals and other healthcare environments.

BrainLit luminaires are designed to provide light for health with all luminaires providing a very wide range of circadian impact.

ASK

Art: 100001 | Market availability: EU, US

CE LED CRI/Ra >90 COMPLIANT WITH IEEE1789 IP44 RoHS

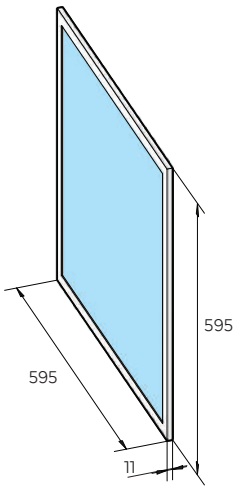

Lumen output
3800lm

LED color temperature
2700K-7300K

Connector
WAGO Winsta®

Lifetime
L70B50: >83 000 h

Color
Aluminium Silver

Ask is our best-selling luminaire and forms the basis of many installations. With a wide light spectrum between 2700K and 7300K, it creates a dynamic light environment with many possibilities.

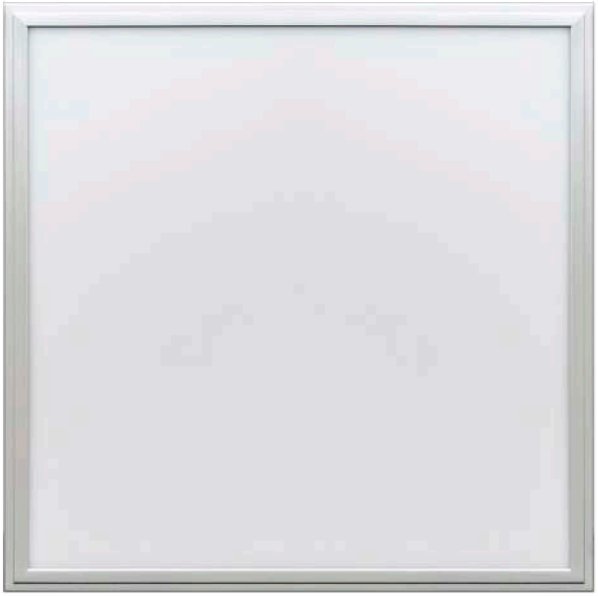

EMBLA

Art: 100009 | Market availability: EU

LED | CRI/Ra >90 | COMPLIANT WITH IEEE1789 | IP44 | RoHS | 24h

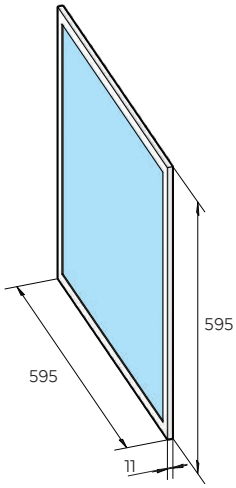

Lumen output
Max 3000lm

LED color temperature
1600K-7300K

Connector
WAGO Winsta®

Lifetime
L70B50: >83 000 h

Color
Aluminium Silver

The BrainLit Embla, a 24/7 tunable white ceiling panel, provides the right light during both day and night. By dynamically adjusting its color temperature anywhere between ice blue white (7300K) to warm white (1600K), you can transform the ambience of a room and promote the circadian alignment in the right way whether used during day or night.

ASK / EMBLA FRAME

Art: 400001 Size: 600x600 mm Color: White

With our aluminum frames for Ask and Embla, there is a greater flexibility for the installation. The fixed frame is suitable for smooth concrete or plaster ceilings. The suspended frame has the same function and is ideal for mounting near workplaces or conference tables.

Options:
Cable for commuting

BALDER

Art: Ø 60 cm 100007 | Ø 90 cm 100008 | Market availability: EU

LED | CRI/Ra >90 | COMPLIANT WITH IEEE1789 | IP20 | RoHS

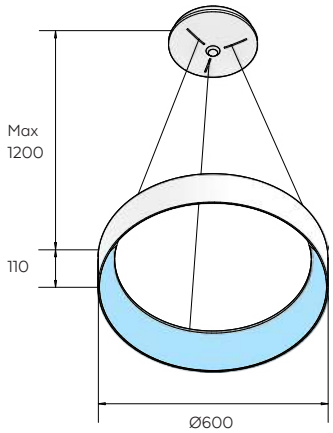

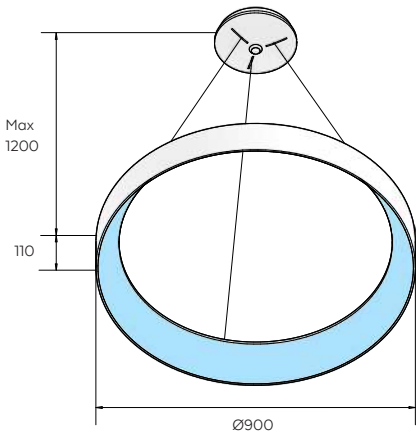

Lumen output
3100lm / 7200lm

LED color temperature
2700K-6500K

Connector
WAGO Winsta®

Lifetime
L70B50: >100 000 h

Color
White

Balder is a pendant luminaire in a stylish design.
The hollow shape creates an illusion that it is almost floating.
Balder is a perfect alternative for lounges, meeting rooms,
waiting rooms and other common areas.

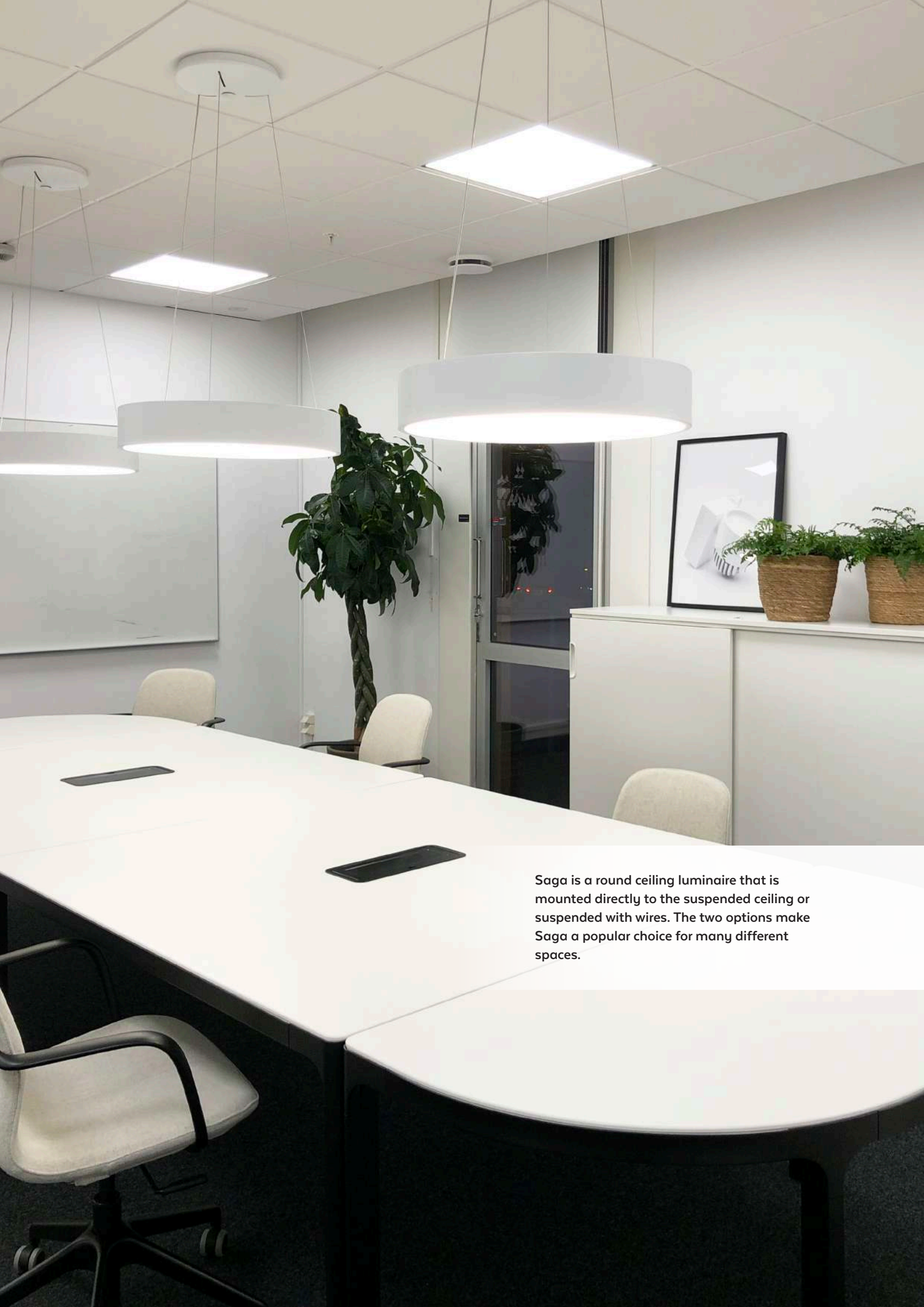

Saga is a round ceiling luminaire that is mounted directly to the suspended ceiling or suspended with wires. The two options make Saga a popular choice for many different spaces.

PENDANT

SURFACE MOUNT

SAGA

Art: Surface mount 100005 | Pendant 100006 | Market availability: EU

LED | CRI/Ra >90 | COMPLIANT WITH IEEE1789 | IP20 | RoHS

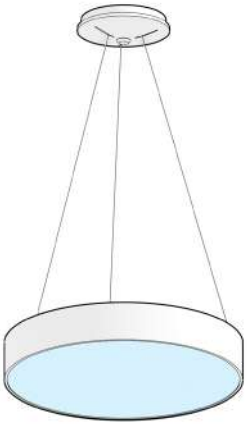

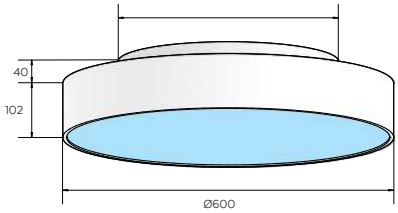

Lumen output
3400lm

LED color temperature
2700K-6500K

Connector
WAGO Winsta®

Lifetime
L70B50: >100 000 h

Color
White

FREJA

Art: 100002 | Market availability: EU

BrainLit Freja is a powerful yet discrete, tiltable, dynamic, recessed LED spot light that brings life and contrast to any room. It provides balance to the emotional experience of a space. By dynamically adjusting its color temperature anywhere between cold white (6500K) to warm white (2700K) you can transform the ambience of a room and promote circadian alignment.

LED | CRI/Ra >90 | COMPLIANT WITH IEEE1789 | IP20 | RoHS

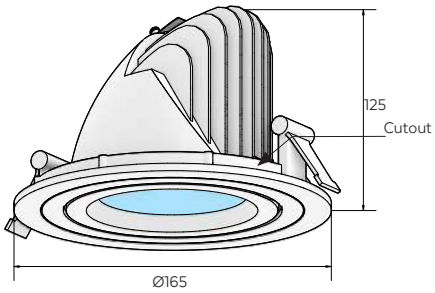

Lumen output
2200lm

LED color temperature
2700K-6500K / 1800K-4000K

Connector
WAGO Winsta®

Lifetime
L70B50: >100 000 h

Color
White

TYR

Art: 100004 | Market availability: EU, US

Tyr is a built-in spot with a slightly lower brightness to be able to create BCL environments with a wider light dimension. It is often used as accent lighting or in our Sun and Sky concept to create a comfortable feeling in a room in combination with brighter luminaires.

LED | CRI/Ra >90 | COMPLIANT WITH IEEE1789 | IP20 | RoHS

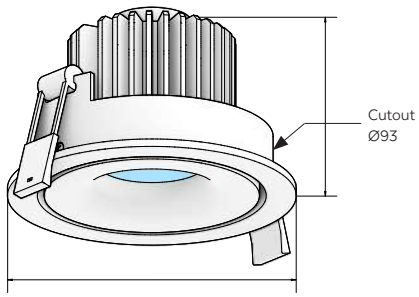

Lumen output
430lm

LED color temperature
2700K-6500K / 1800K-4000K

Connector
WAGO Winsta®

Lifetime
L70B50: >100 000 h

Color
White

IDUN

Art: 100016 | Market availability: EU

LED | CRI/Ra >90 | COMPLIANT WITH IEEE1789 | IP20 | RoHS

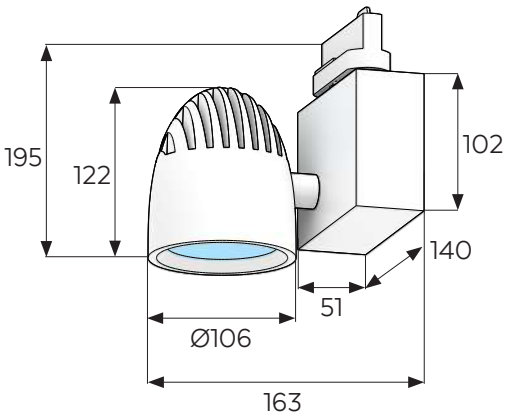

Driver size LxWxH (mm): 132x78x31

Lumen output
2200lm

LED color temperature
2700K-6500K / 1800K-4000K

Connector
Global track DALI

Lifetime
L70B50: 100 000 h

Color
White

Idun is a powerful yet discreet, adjustable, tracklight that contributes to the ambiance of any room.

SENSORS

Art: 300005

IP20

The motion sensor perceives movement - enabling automatic on and off for the lighting. It allows the BCL system to handle short term activities in a room. By reducing the time that the light is on, it can also help reduce energy consumption. When sensors do not detect motion, the lighting is slowly dimmed down to make the users aware that the lighting will soon turn off. Many types of motion and other sensors can be used with the BrainLit system - at least one motion sensor installed in each room is recommended.

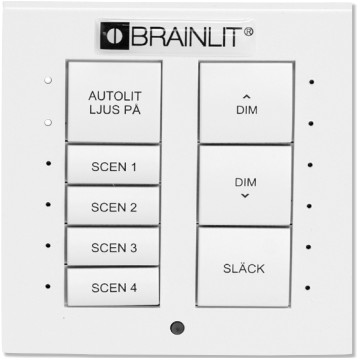

KEYPAD

Art: 300003 (black) / 300004 (white)

IP20

A keypad enables end users to instantly control the light setting in a room. Keypads can be configured to individual needs by BrainLit, with standard keypad offering the following options:

- AutoLit recipe with best BCL effect
- Light scene recipes: Boost, Efficient, Relax, Lounge
- Dimming to adjust the intensity level, up and down
- Light off

TOUCH SCREEN

Art: 300001

IP20

As a complement to, or instead of the keypad, there is an option to install a touch screen. The touch screen provides all the possibilities of the keypad but with a different visual feedback. The touch screen also includes added configurations as well as the ability to control the light in other rooms from the same touch screen. In addition to this there is also the ability to initiate a simulation of Autolit, which then runs the circadian rhythm curve in 90 seconds. The changes that occur during the day are visualized by the light and simulated on the touch screen.

LCS LIGHT CONTROL SYSTEM

Art: 200001 (LCS M1)

IP66

Supply voltage range / power frequency
100-277V 50/60Hz

Max number of luminairs
64 (32+32)

Max number of sensors/switches
20

Connection technology
WAGO Winsta®
Ethernet

The LCS is the host and controller of the BrainLit lighting system with hardware running Brainlit's software handling input from peripherals such as sensors, keypads and touch screens. The system controls the luminaire output according to BCL recipes together with input from peripherals. The BCL system is conveniently scaleable.

Multiple connected LCSs can be linked in a larger dynamically configured BCL system sharing input from peripherals. The LCS easily integrates with building automation systems such as A/V systems, fire alarms and other sensor technologies.

BRAINLIT
:ALVEN

LIGHT THAT IS YOURS

BrainLit Alven delivers the same BioCentric Lighting™ performance as our networked solutions, just in a free-standing form. So instead of installing an entire BioCentric Lighting™ system in a room, you can assemble and plug in BrainLit Alven on your own and immediately receive the benefits of BioCentric Lighting™. With BrainLit Alven, our light environments can be adapted to your daily life and daily needs - and can help you feel more energized, maintain focus, and perform at your very best.

ALVEN

Art: 100018 | Market availability: EU, US

CE | LED | CRI/Ra >90 | COMPLIANT WITH IEEE1789 | IP20 | RoHS

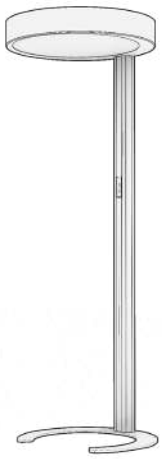

Lumen output
6400lm

LED color temperature
2700K-6500K

Connector
220V
Ethernet / Wifi / Bluetooth

Lifetime
L70B50: **>100 000 h**

Color
White

The different light settin
can be used throughout t
individual's natural circac
an energy boost before c
or to unwind towards the

BrainLit Alven™ is a multi
multiple employees can c
load the BrainLit app, an
BioCentric Lighting™.

LIGHT SETTINGS

BioCentric Lighting™ is a dynamic system with varying levels of light intensity and color throughout the day. The light can further be adapted through our light settings, for example to give you extra energy before a meeting, or to unwind at the end of a long day. The AutoLit, Boost and Relax recipes ensures you get access to the right light for every occasion.

For example, you wake up one morning but feel a bit slow. This would be an optimal time to use the Boost scene for a short time to energize you for the day ahead. In the afternoon when you want a break, the Relax scene can be manually activated to create a calmer ambience for a short period of time. We recommend using AutoLit during the majority of the day to maintain synchronization with your circadian rhythm.

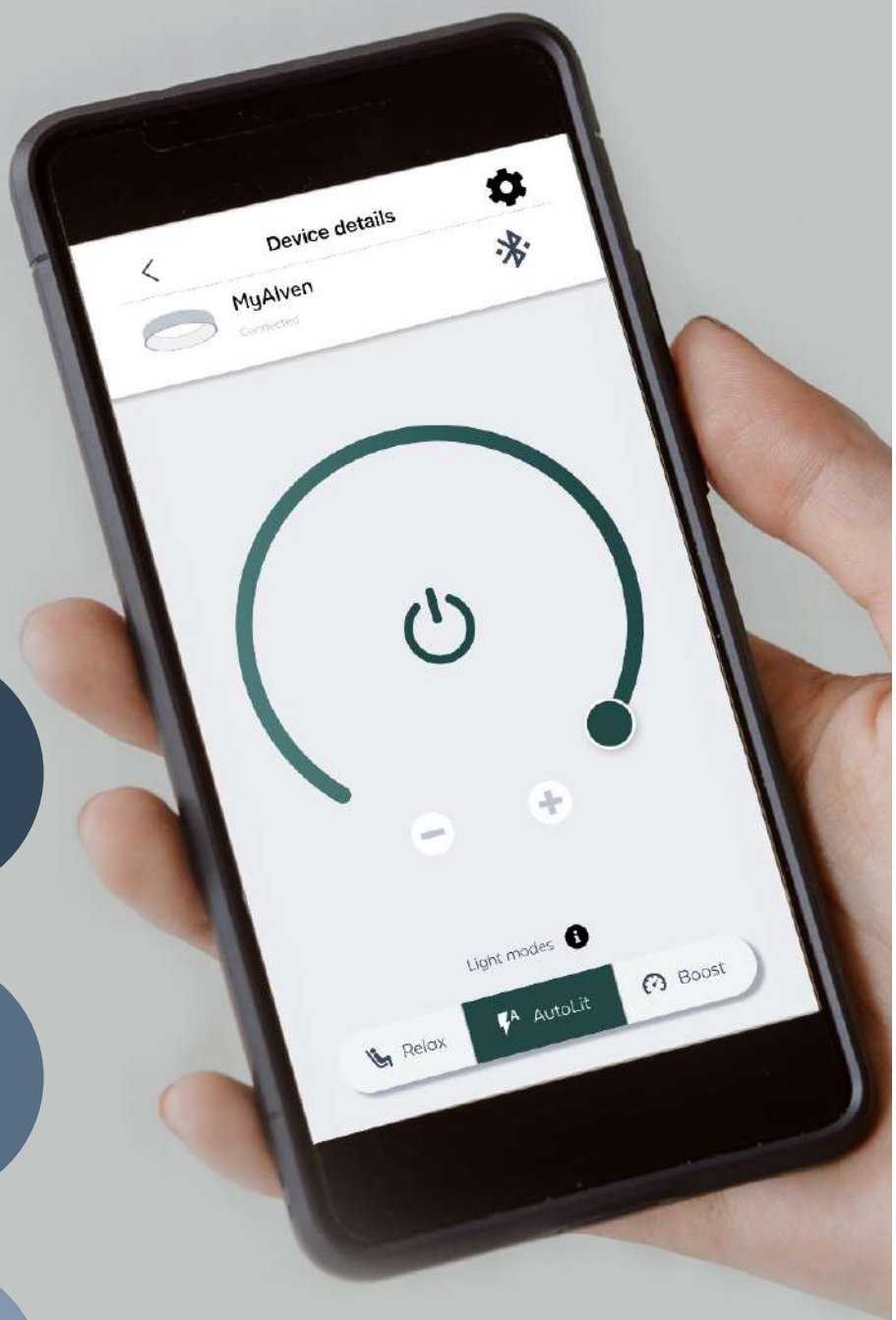

AUTOLIT
The AutoLit recipe is the default setting that best helps you maintain your circadian rhythm.

BOOST
Boost increases your alertness and stimulates your cortisol levels, giving you a refreshing effect.

RELAX
Relax creates a natural light environment that feels more neutral to your eyes, and can help you wind down.

BrainLit App
Download the BrainLit app to control your BrainLit Alven™ and to further personalize your BioCentric Lighting™ experience.


Eliminate >90%
of SARS-COV2
in 2 min[1]

LIGHT FOR SAFER ENVIRONMENTS

The world we live in is uncertain and the recent pandemic has highlighted the fact that viruses and bacteria can live both in the air and on surfaces and thereby spread and affect our health. As we learn to live with these infection outbreaks there is demand for an efficient way to disinfect frequently visited public spaces to protect people from harmful pathogens.

Using our knowledge and experience in lighting we have developed a unique system that uses UV-C lighting to quickly, safely and automatically disinfect both air and surfaces to create a safe and healthy environment.

- ✓ **Safeguarding frequently visited closed spaces with high degree of pathogens such as restrooms**
- ✓ **Eliminates pathogens from both air and surfaces**
- ✓ **Manual disinfection using chemicals can be minimized**

WITH SAFETY IN MIND

Areas with no humans are exposed to UV-C light for disinfection. An advanced safety system using radar and infrared sensors ensures that disinfection will only start when the space is unoccupied. If someone enters the space during disinfection the presence detection is triggered, and it switches from UV-C lighting to regular lighting.

UVEN

Art: 100021 | Market availability: EU

LED | CRI/Ra >90 | COMPLIANT WITH IEEE1789 | IP20 | UV-C DISINFECTION | RoHS COMPLIANT

Power property **120-277V 50/60Hz, 50W+75W+20W**	Peak wavelength **260-280 nm**
LED color temperature **6500K-2700K**	FWHM **<40nm**
Lumen output **4000 lm**	Radiated power **450 mW**
Lifetime **L70 > 100 000 h**	Lifespan **10 000 h**

REFERENCES

1). R. Zhang et al. A circadian gene expression atlas in mammals: implications for biology and medicine. Proc Natl Acad Sci U S A 111, 16219-16224 (2014).

2). M. D. Ruben et al. A database of tissue-specific rhythmically expressed human genes has potential applications in circadian medicine. Sci Transl Med 10 (2018).

3). N.E. Klepeis et al. The national human activity pattern survey (NHAPS): a resource for assessing exposure to environmental pollutants. J Expo Anal Environ Epidemiol 11(3):231-52 (2001).

4). Center for Environmental Therapeutics. Consensus recommendations for optimum indoor lighting. https://cet.org/consensus-recommendations-for-optimum-indoor-lighting/. Access date 2021-10-20.

5). O. Osibona et al. Lighting in the Home and Health: A Systematic Review. Int J Environ Res Public Health 18(2), 609 (2021).

6). S. Wahl et al. The inner clock-Blue light sets the human rhythm. J Biophotonics. 12(12), (2019).

7). R. Méndez-Hernández et al. Suprachiasmatic Nucleus-Arcuate Nucleus Axis: Interaction Between Time and Metabolism Essential for Health. Obesity (Silver Spring). 28(1): 10-17 (2020)

8). R. Paganelli et al. Biological clocks: their relevance to immune-allergic diseases. Clin Mol Allergy 16(1), (2018).

9). A. Wirz-Justice et al. The relevance of daylight for humans. Biochemical Pharmacology 191, 114304 (2021).

10). T.T. Norton and J.T. Jr. Siegwart. Light levels, refractive development, and myopia--a speculative review. Exp Eye Res. 114:48-57 (2013).

11). MG Figueiro et al. The impact of daytime light exposures on sleep and mood in office workers. Sleep health (2017).

12). C.A. Hviid et al. A field study of the individual and combined effect of ventilation rate and lighting conditions on pupils' performance. Building and environment. 2020.

13). S. Andersson Eriksson and K. Wingren. Master thesis: The effect of a dynamic LED light intervention on sleep quality of adolescent students. Lund University. http://lup.lub.lu.se/student-papers/record/8876069 (2016).

14). B.K. Gehlbach et al. The effects of timed light exposure in critically ill patients: A randomized controlled pilot clinical trial. Am J Respir Crit Care Med 198(2), 275-278 (2018).

15). E. Facer-Childs, R. Brandstaetter, The impact of circadian phenotype and time since awakening on diurnal performance in athletes. Curr Biol 25, 518-522 (2015).

16.) Uven disinfection evaluation with SARS-CoV-2 plaque assay, Swedish Defence Research Agency, 2021

IMPROVING LIFE WITH BIOCENTRIC LIGHTING™

BRAINLIT

info@brainlit.com • www.brainlit.com
Scheelevägen 34, 223 63 Lund
+46 46 37 26 00

BLT / 1_01