IMPROVNING LIFE WITH BIOCENTRIC LIGHTING™

2021-2022

BIOCENTRIC LIGHTING™

PRODUCT CATALOG

PATENTED LIGHT SYSTEMS FOR
HEALTH & WELL-BEING

BRAINLIT

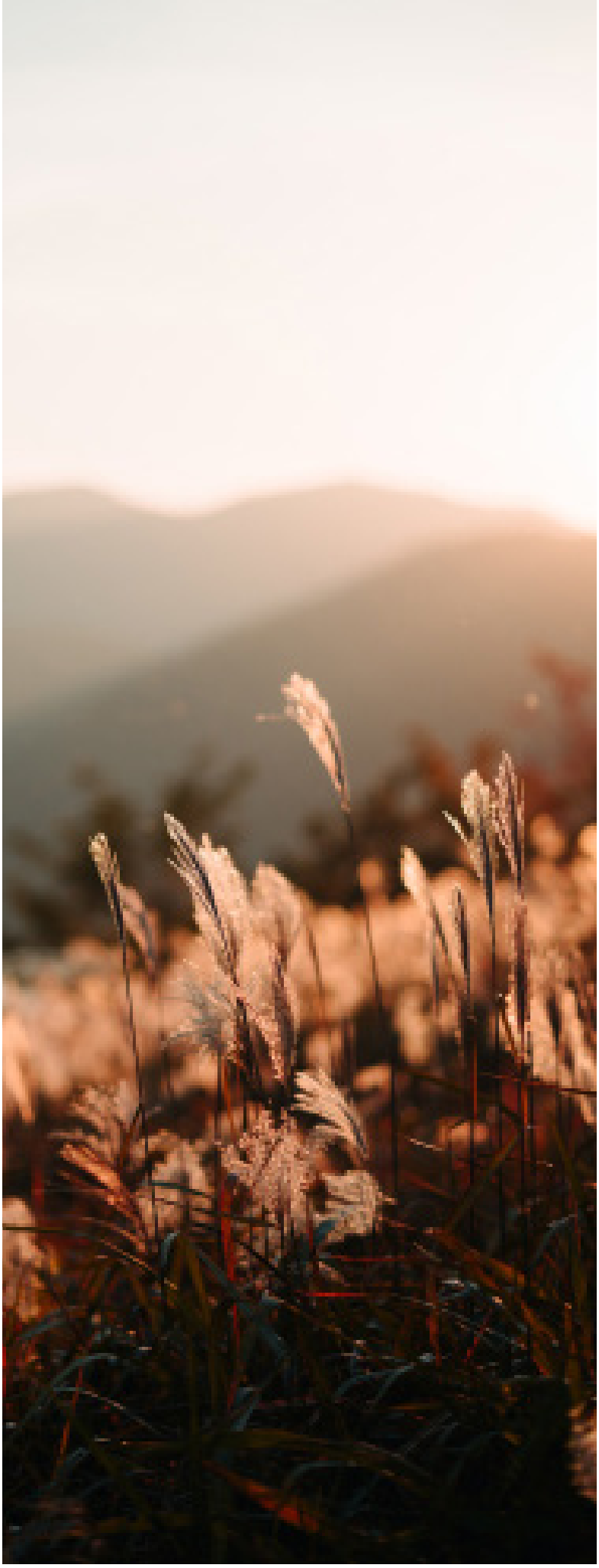

BRAINLIT INTRODUCTION

WHO WE ARE

In 2012 Tord Wingren – inventor of Bluetooth - founded BrainLit in Sweden. Together with a dedicated team he has since developed several solutions including BioCentric Lighting™ (BCL™), a self-learning system leveraging LED luminaires, light control systems, UI, sensors and BCL Light Recipes to optimally mimic the solar day for the individual, delivering the equivalent circadian boosting biological benefits of the sun and ultimately improving sleep – the preeminent pillar of human health.

Headquartered in Lund, Sweden, BrainLit has subsidiaries on three continents and growing. BrainLit is a health technology company first-and-foremost, that focuses on light to deliver significant health and wellbeing improvements. By doing so, we help our users reduce operational costs at scale, minimize capital outlay, enhance productivity while reducing service errors, improve cognitive performance and increases overall health and safety for employees and guests alike.

It just so happens that when delivering light-for-health, BrainLit can equal and far exceed the practical elements of commoditized light systems, including energy savings and install cost parity, securing truly valuable indoor environments for our users.

BIOCENTRIC LIGHTING™

BioCentric Lighting™ is based on a deep understanding of human physiology. Light affects all species on earth, especially humans. Evolution has made natural variation of light essential for mankind, a need that hasn't changed despite our changed behaviors. BioCentric Lighting™ is the only system on the market that can fully promote the circadian alignment by synchronizing our biological needs with solar time.

Biological
With BioCentric Lighting™ we control and combine the light parameters that influence your physiology. These are wavelength, intensity, direction, timing and duration. Our lighting environments are designed to have the same positive effects as daylight, securing a natural synchronization with biological clocks. Our light environments provide adaptable light to fulfill the biological need for each day, regardless of season.

Individual
Individuals have different biological needs with regard to lighting environment. Various situations demand different lighting conditions. The BioCentric Lighting™ system is easily customized according to the unique needs of the individual and the situation. BCL environments include sensors and algorithm based recipes, light recipes, to adapt to different users, occupations and times of day.

Evolving
Ongoing research provides new understandings of the beneficial effects of light for improving sleep and wellbeing. The BioCentric Lighting™ system is easily adaptable to meet these new insights. BrainLit's technology is in constant development in line with the latest research and our scientific advisory board. This creates a future for indoor lighting where human well-being is always in focus.

WHY IS BIOCENTRIC LIGHTING™ IMPORTANT?

IT ALL STARTS IN THE EYE

The science behind BioCentric Lighting™ lies in the understanding of human anatomy and our responsiveness to light. In the retina in the back of our eyes, we have rods and cones that help us interpret our surroundings: we call that the visual system. There is another type of photosensitive cell in the retina that is called the retinal ganglion cell, or the 3rd receptor.

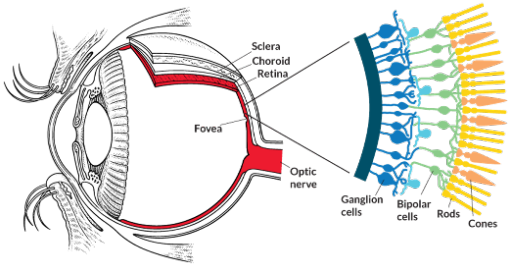

The ganglion cells are photoreceptors in the retina acting as sensors for daylight.

This 3rd receptor has nothing to do with visual interpretation, instead the signal goes straight to our internal master clock, which in turn controls the timing of numerous internal processes such as our sleep/wake cycle, our metabolism, our immune system and so on. It does that through adjusting the production of hormones such as melatonin and cortisol. The graphic below shows a human's typical curves for cortisol and melatonin levels based on a normal day with sunrise at 7.00 and sunset at 17.30.

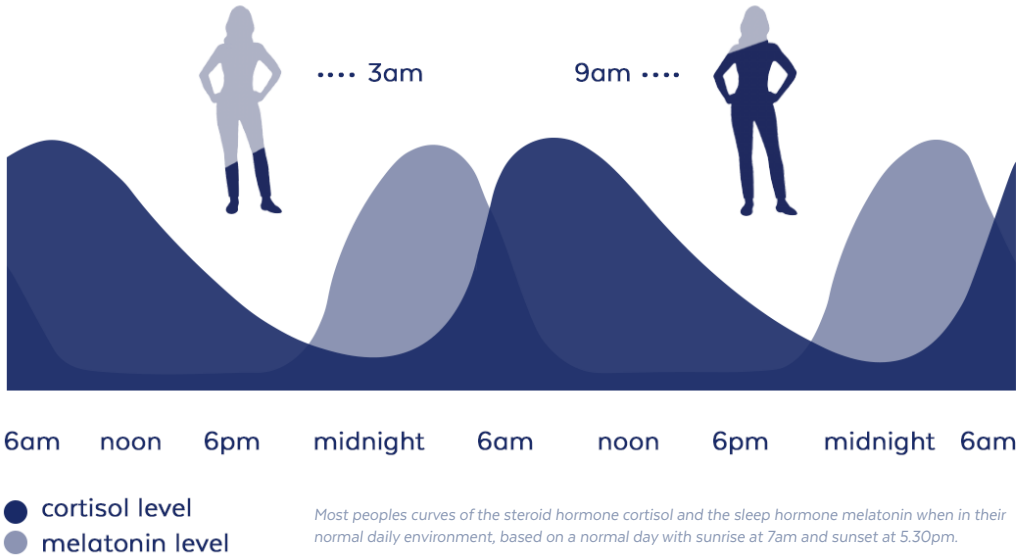

Most peoples curves of the steroid hormone cortisol and the sleep hormone melatonin when in their normal daily environment, based on a normal day with sunrise at 7am and sunset at 5.30pm.

The timing of our body's internal processes is collectively called our circadian rhythm. Light information from the retinal ganglion cells is used to synchronize the circadian rhythm with our surroundings to avoid circadian misalignment and sleep deprivation.

THE IMPORTANCE OF DAYLIGHT

Increasing amounts of evidence reiterate the importance of daylight for our health, wellbeing and sleep. The scientific community suggest that approximately 20% of our genome is light dependent and that 75% of light that influences our health is non-visual.

As seen in the graphics on the right, daylight is rich in delivering light with full color spectra, including blue wavelengths, but other light sources such as incandescent bulbs, halogen lamps, and fluorescent tubes only scarcely contain these important wavelengths.

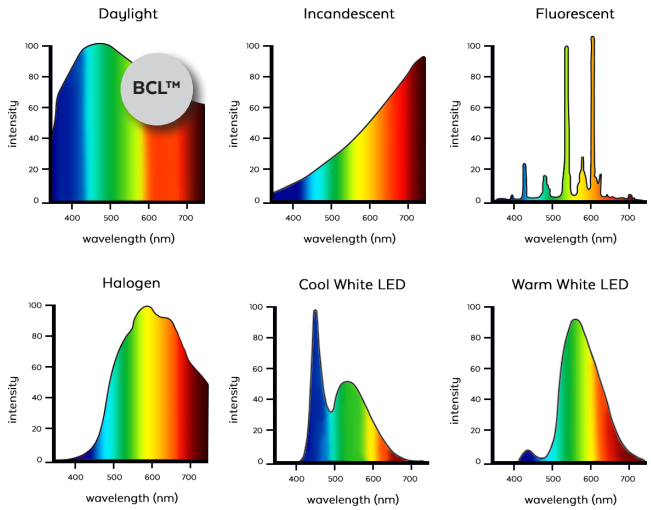

Our modern 24-hour society is often in conflict with our intrinsic photobiology. More often than not, natural synchronization with daylight is lacking, and light indoors usually does not have the necessary properties to entrain the circadian rhythm. For example, a sunny day outside might give 100,000 lux, a cloudy day 10,000 lux, whereas indoor lighting commonly only provides 300 lux luminance while also having a suboptimal color spectra.

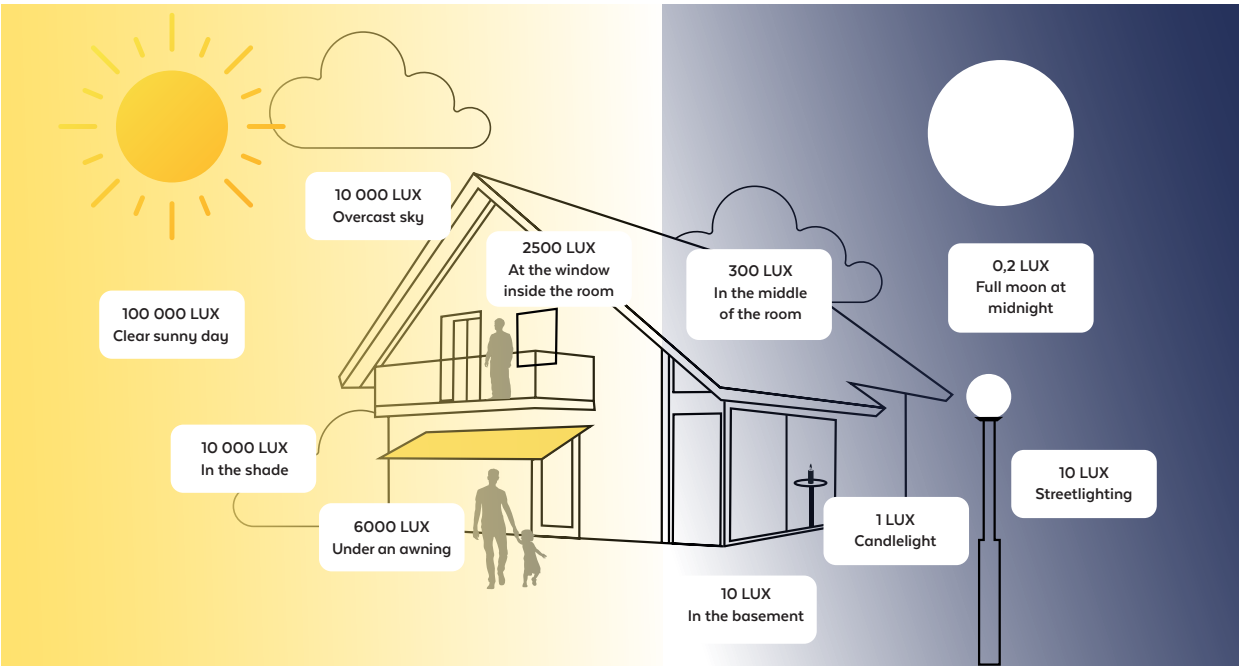

VALIDATED BY SCIENCE

BCL is fundamentally designed from the deep understanding of the circadian system in human beings by our scientific board, with professors in medicine, environmental psychology, psychiatry and physics as prominent members. Each member is in place to ensure that BrainLit continues to reflect the latest research and understanding of human physiology.

Klas Sjöberg
Chairman of the Scientific Board
PhD. Consultant and Associate Professor at the Gastro Clinic at Skåne University Hospital.

Thorbjörn Laike
Member of the Scientific Board
PhD. Professor of Environmental Psychology at the Department of Architecture and Built Environment, Lund University.

Lennart Minthon
Member of the Scientific Board
PhD. Professor at Lund University, MultiPark: Multidisciplinary research on Alzheimer's disease. Founder of Minneskliniken. Co-founder of companies focussing on dementia care.

Lars Samuelson
Member of the Scientific Board
PhD. Professor of Semiconductor Electronics at Lund University. Awarded the "Einstein Professorship" by the Chinese Academy of Sciences. Appointed Fellow of the American Physical Society.

Madeleine Selvander
Member of the Scientific Board
PhD. Ophthalmologist. Former senior consultant at Skåne University Hospital. Head of private ophthalmology clinic Sundets Ögonläkare.

Tord Wingren
Founder, Innovations, Strategy & Partnerships
More than 30 years' experience within IT and communication industry. Pioneered Bluetooth by writing its first specification. Innovator and patent initiator of BrainLit's basic patents. M.Sc Electrical Engineering.

MADELEINE SELVANDER

– We investigate scientific research that may become relevant for BrainLit and discuss new ways to implement scientific findings.

Science never sleeps, research goes on all day, every day. Thus a science based company like BrainLit must always keep up with the latest scientific findings, or risk becoming obsolete. For this reason, since the company was founded, it has developed its product around the advice provided by its scientific advisory board, tasked with keeping management updated and finding new ways to implement the technology.

Madeleine Selvander is one of the members of the scientific advisory board. As an ophthalmologist and former eye surgeon, she literally knows the workings of the human eye from the inside out. Not to mention how it is affected by light and what impact this in turn has on the rest of our biology.

– BrainLit's technology is based on two different aspects of science. On the one hand, the technological base of LED lights, optics and nano technology to produce short wavelength light and recreate daylight conditions indoors. On the other hand, how our bodies react to the light gathered in our eyes, and our ability to analyse this, explains Madeleine Selvander.

Less than 20 years ago a new kind of photoreceptor cell was discovered in the human eye. The ipRGCs cell is a special type of ganglion cell found in a deeper level of the eye than previously imagined. This type of cell reacts to blue wavelength light, around 480 nm, and control our circadian rhythm.

Adapting to individual chronotypes

– Indoor luminaires, for example lightbulbs, halogen lights and fluorescents, produce very little light with these wavelengths. When we lack this stimulus, we lose our sense of day or night. A day and a night equals 24 hours, but most people have a circadian rhythm slightly longer than 24 hours, so we need the light to set our rhythm or it will start lagging. For office workers, this means that they become evening persons, but still have to get up early in the morning and suffer from sleep deprivation, says Madeleine Selvander.

– We investigate scientific research that may become relevant for BrainLit and discuss new ways to implement scientific findings. This is the foundation of BrainLit's technological vision; providing indoor light with the quality of natural outdoors light and thus resetting our circadian rhythms instead of letting workplace conditions gradually wear us down. For Madeleine Selvander, who is not only an ophthalmologist but also has an engineering background, her first contact with BrainLit seemed determined by fate.

– I met Peter K Andersson, who was then the CEO of BrainLit, and he mentioned something about light and how it affects us. To be honest, I was very skeptical, but also intrigued and curious. If I was unaware of this, the same had to be true for many others as well. So I became persistent in telling them they needed help from someone younger – and maybe from a woman, she laughs.

Today, she is one of the experts of the scientific advisory board. Klas Sjöberg, chief physician of gastroenterology at the world renowned University of Lund is the chairman and summons the board every six weeks. The other members are Thorbjörn Laike, professor of environmental psychology, Lennart Minthon, professor of clinical memory research, Lars Samuelsson, professor of semiconductor electronics and Tord Wingren, the founder of BrainLit, who contributes in all areas from his unique perspective and vision.

Aligning research and technology

– We investigate scientific research that may become relevant for BrainLit and discuss new ways to implement scientific findings. Often BrainLit has technological solutions that may be used in research, but no one has yet done that research. For instance, BrainLit has the patent and the technological solution for personalized light conditions, but the research on how personalized light differs from standard light is currently quite limited. This is mostly due to the problem of the individual variations and the challenge to get accurate data of the actual light they are exposed to, says Madeleine Selvander

Sometimes the technology is ahead of the science. In this case the scientific advisory board acknowledge the possibility to accelerate research by offering researchers the use of BrainLit's technology to get more accurate data. But despite the wide areas of expertise gathered in the board, there are still subjects that need further exploration.

– We will invite experts in chronobiology and how our biology is affected by the circadian rhythm and BioCentric Lighting. Together, we have a more than basic understanding of the functions, but to have access to truly deep knowledge of this intricate relationship... That would be so interesting! Madeleine Selvander concludes.

OUR SEGMENTS

OFFICE

Traditional office lighting does not support our physiological needs. Lighting in office environments has traditionally focused on ergonomics and visual function, but light is not only for vision. The importance of office lighting is crucial for employee well-being, productivity and comfort. Studies among office workers have shown that those who receive light that stimulates the circadian system, especially during the first half of the working day, have an increased sleep quality and reduced sleep onset latency.

EDUCATION

The BCL lighting system is customized to suit the needs of students of all ages, along with personnel, ensuring a comfortable environment. Access to daylight indoors is crucial for students during the darker months of the year when the hours of natural daylight are fewer. Activities during the school day often take place indoors, providing little opportunity to enjoy daylight outdoors. BCL helps promote learning through both Elven and Alven systems.

HEALTHCARE

Sleep is an important factor to promote the wellbeing and recovery of patients. Impaired sleep is a known hospital stressor, and hospitalized patients struggle to get sufficient sleep at night due to factors like discomfort, worries, noise, inappropriate light exposure and pain. BrainLit's BCL systems can be used to help patients syncronize their circadian rhythm through fixed Elven installation or Alven placed in ward rooms.

SPORTS

As an athlete's unique circadian rhythm affects individual performance, light can be used to modulate this rhythm as well as having direct beneficial effect on alertness and wellbeing. A group of researchers categorized elite athletes according to their body clock types into early, intermediate and late circadian types. They found performance differences that could be up to 26 % over the course of the day depending on the type. BCL caters do different chronotypes and can be used in various sports settings to improve performance.

HOSPITALITY

Lighting plays a key role in creating a comfortable environment and can be used to create beneficial meeting spaces. Whether a BCL system is installed in conference rooms or reception areas, the light can be adapted to fit specific activites and promote well-being through use of different light settings throughout the day. For example, relax scenes can be used in a lounge setting to help guests wind down.

BioCentric Lighting™
has many benefits for
both businesses
and individuals.

Learn more:
brainlit.com

STORIES

FROM THE USER'S PERSPECTIVE

At BrainLit, we are constantly working to build meaningful relationships with our customers. We value providing resources so that everyone can get an idea of the benefits behind BioCentric Lighting™ and how it can be applied to different segments. Whether you are thinking about getting a BCL system installed in your place of work or you have a personal interest in our solution, our Stories can give you an insight in our business and customers. Immerse yourself in the history of BrainLit or read more about our installations.

– Now, our office space is like one big dynamic light shower. We are all much more alert and feel better.

Joachim Samuelsson, Crunchfish

–Working at Crunchfish is intense right now. I sleep less than normal as there is so much to do. BioCentric Lighting keeps me alert during the workdays, and in the evenings, it helps me to quickly fall asleep. Then I wake up feeling rested, ready to take on another day. Those focused morning hours keep me ahead of the game, Joachim Samuelsson the CEO explains.

The Crunchfish office is situated in the thriving old harbor area of Malmö, in the Media Evolution City building, a modern co-working space established in 2012 in an old factory building. The 1,100 square meter office is branded The Penthouse and spans the entire 4th floor. Crunchfish sublets parts of the space to five other tenants.

One third of the area is occupied by Crunchfish itself. This has been fully equipped with BioCentric Lighting, but it is also one of the first installations to utilize the personal settings of the new BrainLit Alven. The BioCentric Lighting system is also installed in the open shared area and in the office of Pej, one of the other tenants at The Penthouse, where Joachim Samuelsson was an early investor and serves as a member of the board.

– Our landlord Wihlborgs paid for the installation and charges for it as part of our rental agreement. That is a great deal for everyone. We enjoy better Health as a Service without making a capital investment, and Wihlborgs raises the value of the office space. That is the preferred way for us as we will not take the installation with us if we move, Joachim Samuelsson says.

A healthier work environment

-You would previously feel your mind starting to slack during the afternoon, Samuelsson says. You kept looking at your watch and wondering when it was time to go home. Since we installed BioCentric Lighting, that doesn't happen anymore. Now, our office space is like one big dynamic light shower. We are all much more alert and feel better. The slightly increased monthly rent is well worth being more efficient and healthier.

”During the morning and office hours, I was more energic and productive. During the nights, I was getting more sound and restful sleep.”

Eeva Hayashi
Head of Business & Partner Development, SONY

Read more:
brainlit.com/stories

BRAINLIT
:ELVEN

LIGHT FOR EVERY ENVIRONMENT

BrainLit ELVEN, is a fixed installation system which promotes well-being using BioCentric Lighting™, in any professional environment. The system scales effortlessly and allows full user flexibility, making it easy to use in a variety of different segments.

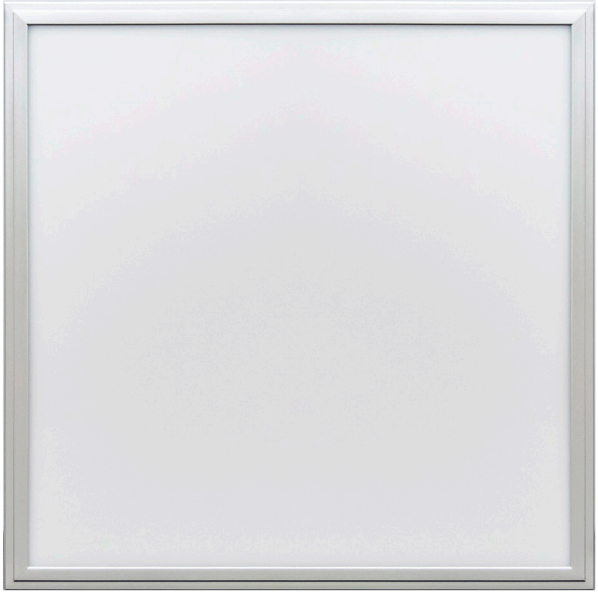

ASK

Art: 100001

LED | CRI/Ra >90 | COMPLIANT WITH IEEE1789 | IP44 | RoHS

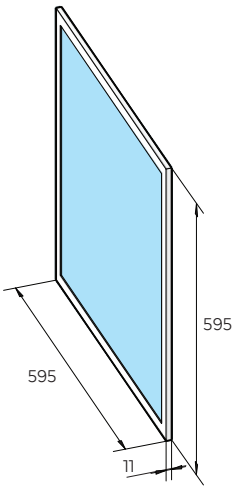

Lumen output
3800lm

LED color temperature
2700K-7300K

Connector
WAGO Winsta®

Lifetime
L70B50: >83 000 h

Color
Aluminium Silver

Ask is our best-selling luminaire and forms the basis of many installations. With a wide light spectrum between 2700K and 7300K, it creates a dynamic light environment with many possibilities.

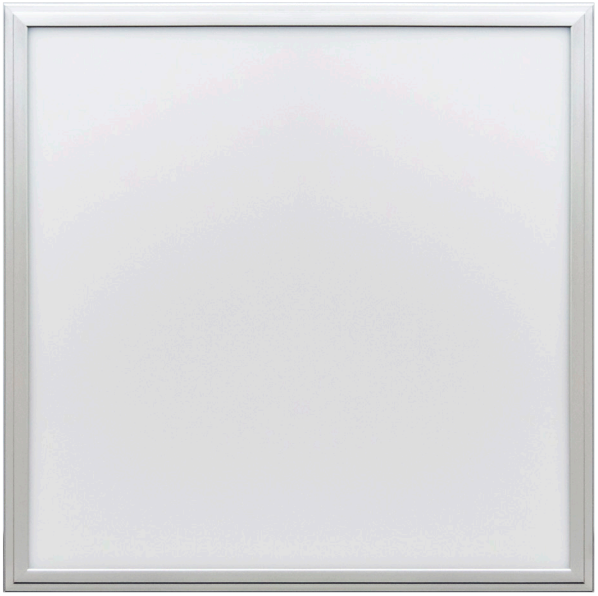

EMBLA

Art: 100009

LED | CRI/Ra >90 | COMPLIANT WITH IEEE1789 | IP44 | RoHS | 24h

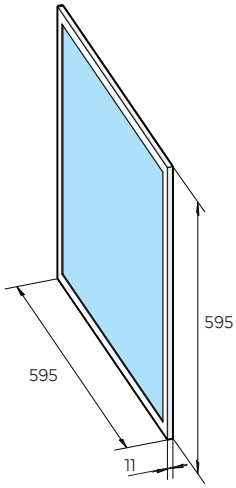

Lumen output
Max 3000lm

LED color temperature
1600K-7300K

Connector
WAGO Winsta®

Lifetime
L70B50: >83 000 h

Color
Aluminium Silver

The BrainLit Embla, a 24/7 tunable white ceiling panel, that provides the right light daytime as well as night time. By dynamically adjusting its color temperature anywhere between ice blue white (7300K) to blue deprived warm white (1600K), you can transform the ambience of a room and promote the circadian alignment in the right way whether used during day- or night time.

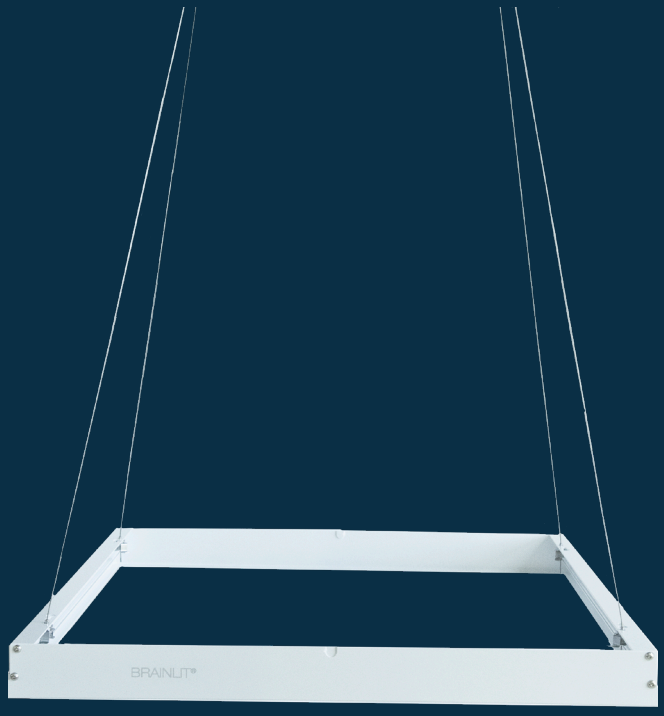

ASK / EMBLA FRAME

Art: 400001 Size: 600x600 mm Color: White

With our aluminum frames for Ask and Embla, greater flexibility is created around the installation. The fixed frame is suitable for smooth concrete or plaster ceilings. The suspended frame has the same function but can with advantage also be mounted above workplaces or conference tables etc.

Options:
Cable for commuting

BALDER

Art: Ø 60 cm 100007 | Ø 90 cm 100008

LED | CRI/Ra >90 | COMPLIANT WITH IEEE1789 | IP20 | RoHS

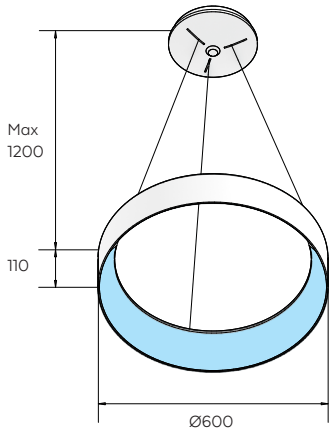

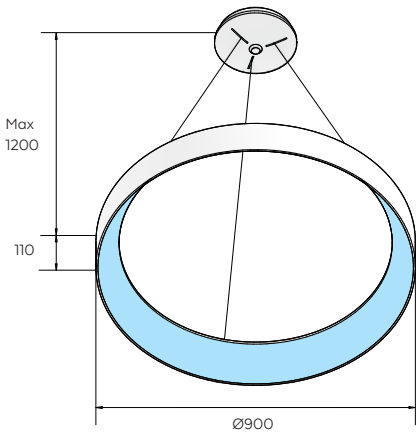

Lumen output
3100lm / 7200lm

LED color temperature
2700K-6500K

Connector
WAGO Winsta®

Lifetime
L70B50: >100 000 h

Color
White

Balder is a bright pendant luminaire in a stylish design. The hollow shape means that it is almost perceived as floating. Balder is a perfect alternative for lounge-like environments, meeting rooms, waiting rooms, etc.

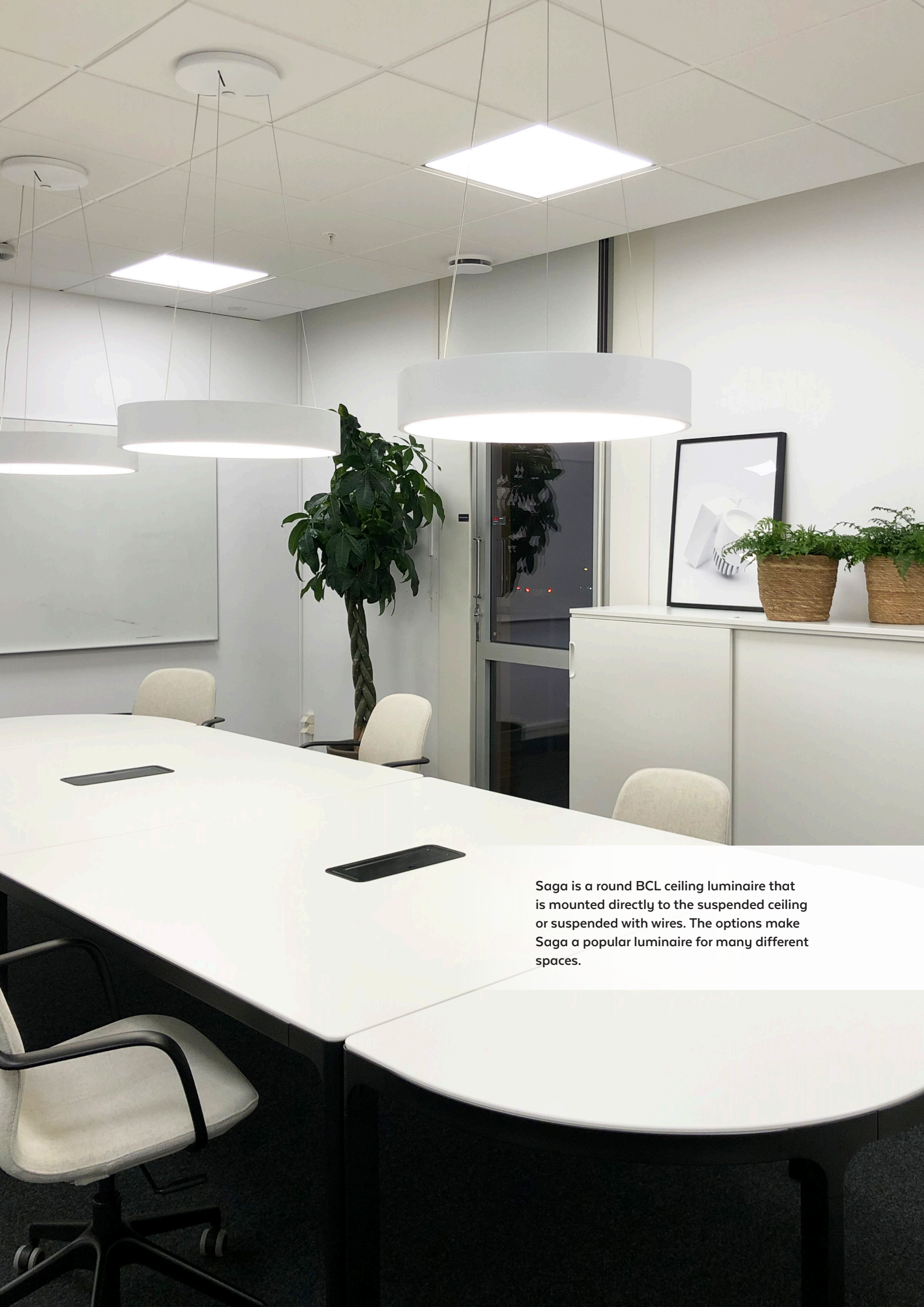

Saga is a round BCL ceiling luminaire that is mounted directly to the suspended ceiling or suspended with wires. The options make Saga a popular luminaire for many different spaces.

PENDANT

SURFACE MOUNT

SAGA

Art: Surface mount 100005 | Pendant 100006

LED | CRI/Ra >90 | COMPLIANT WITH IEEE1789 | IP20 | RoHS

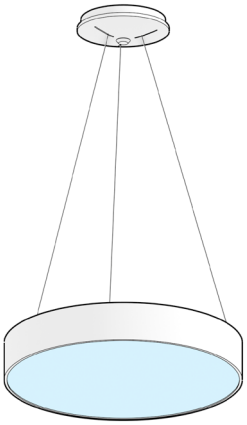

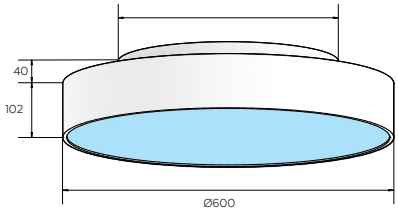

Lumen output
3400lm

LED color temperature
2700K-6500K

Connector
WAGO Winsta®

Lifetime
L70B50: >100 000 h

Color
White


KERASTASE
DIAGNOSIS
& EXCELLENT
SERVICE

FREJA

Art: 100002

BrainLit Freja is a powerful yet discrete, tiltable, dynamic, recessed LED spot light that brings life and contrast to any room. It provides balance to the emotional experience of a space. By dynamically adjusting its color temperature anywhere between cold white (6500K) to warm white (2700K) you can transform the ambience of a room and promote the circadian alignment.

LED | CRI/Ra >90 | COMPLIANT WITH IEEE1789 | IP20 | RoHS

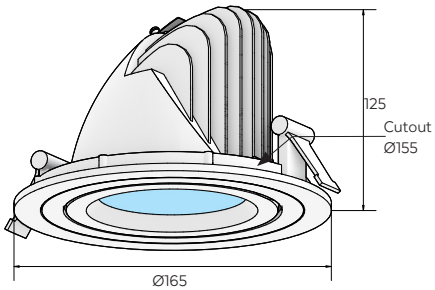

Lumen output
2200lm

LED color temperature
2700K-6500K / 1800K-4000K

Connector
WAGO Winsta®

Lifetime
L70B50: >100 000 h

Color
White

TYR

Art: 100004

Tyr is a built-in spot with a slightly lower brightness to be able to create BCL environments with a wider light dimension. It is often used as accent lighting or in our Sun and Sky concept to create a comfortable feeling in a room in combination with brighter luminaires.

LED | CRI/Ra >90 | COMPLIANT WITH IEEE1789 | IP20 | RoHS

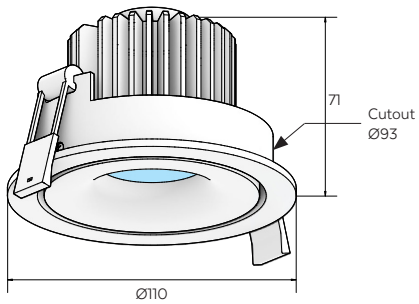

Lumen output
430lm

LED color temperature
2700K-6500K / 1800K-4000K

Connector
WAGO Winsta®

Lifetime
L70B50: >100 000 h

Color
White

IDUN

Art: 100016

LED | CRI/Ra >90 | COMPLIANT WITH IEEE1789 | IP20 | RoHS

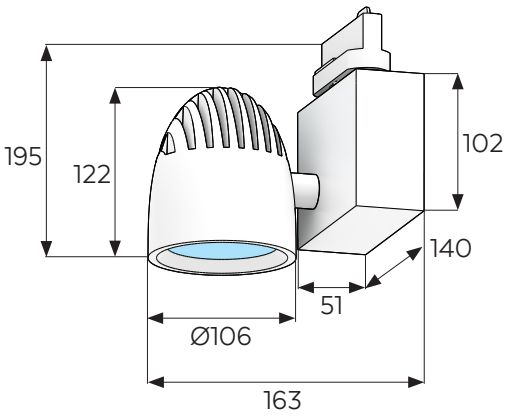

Driver size LxWxH (mm): 132x78x31

Lumen output
2200lm

LED color temperature
2700K-6500K / 1800K-4000K

Connector
Global track DALI

Lifetime
L70B50: 100 000 h

Color
White

Idun is a powerful yet discreet, adjustable, track-light that gives life and contrast to all rooms.

SENSORS

Art: 300005

IP20

The motion sensor perceives movement enabling automatic light on and off. It allows the BCL system to handle short term activities in a room, reducing the time when lighting is on and thus energy consumption. When sensors do not perceive motion, the lighting will slowly be dampened to make the users aware that the lighting will soon be turned off. Many types of motion and other sensors can be used with the BrainLit lighting system, with at least one motion sensor installed in each room recommended.

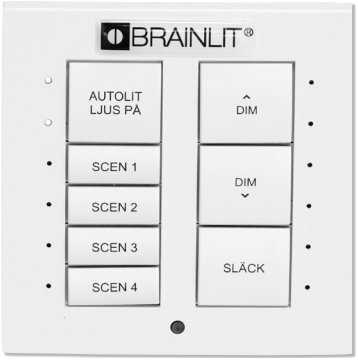

KEYPAD

Art: 300003 (black) / 300004 (white)

IP20

A keypad enables end users to instantly influence the light setting in a room. Keypads can be configured to individual needs by BrainLit, with standard keypad offering the following options:

- AutoLit recipe with best BCL effect
- Light scene recipes: Boost, Efficient, Relax, Lounge
- Dimming to adjust the intensity level, up and down
- Light off to turn the light off

TOUCH SCREEN

Art: 300001

IP20

As a complement to, or instead of the keypad, a touch screen can be installed. The touch screen provides all the possibilities as a keypad but with a different visual feedback. The touch screen also has the option of more configurations as well as the ability to control the light in other rooms from the same touch screen. One area of use in addition to controlling the light in other rooms is to be able to start a simulation of Autolit, which then runs most of the circadian rhythm curve in 90 seconds, then visualizes the changes that occur during the day while they are simulated on the touch screen.

LCS LIGHT CONTROL SYSTEM

Art: 200001 (LCS M1)

IP66

Supply voltage range / power frequency
100-277V 50/60Hz

Max number of luminairs
64 (32+32)

Max number of sensors/switches
20

Connection technology
WAGO Winsta®
Ethernet

The LCS is the host and controller of the BrainLit lighting system with hardware running Brainlit's software handling input from peripherals such as sensors, keypads and touch screens. The system controls the luminaire output according to BCL recipes together with input from peripherals. The BCL system is conveniently scaleable.

Multiple connected LCSs can be linked in a larger dynamically configured BCL system sharing input from peripherals. The LCS easily integrates with building automation systems such as A/V systems, fire alarms and other sensor technologies.

LIGHT SETTINGS

BrainLit Alven delivers light in the form of recipes and scenes. Recipes are dynamic light settings with varying levels of light intensity and color, while scenes are more static and intended for shorter time periods.

AUTOLIT
The AutoLit recipe with 100% intensity is the default setting that best helps you maintain your circadian rhythm.

BOOST
Boost increases your alertness and stimulates your cortisol levels, giving you a refreshing effect.

RELAX
Relax creates a natural light environment that feels more neutral to your eyes.

For example, you wake up one morning but feel a bit slow. This would be an optimal time to use the Boost scene for a short time to energize you for the day ahead. In the afternoon when you want a break, the Relax scene can be manually activated to create a calmer ambience for a short period of time. We recommend using AutoLit with 100% intensity during the majority of the day to maintain synchronization with your circadian rhythm.

BRAINLIT
:ALVEN

LIGHT THAT IS YOURS

BrainLit Alven™ provides an exceptional office environment by leveraging BrainLit's patented BioCentric Lighting™ System. BrainLit Alven™ creates an optimal and personal natural lighting environment, with proper variations of light intensity and color at the right time of the day, to synchronize the body's circadian rhythm and the production of the necessary hormones (e.g., cortisol and melatonin) to keep your body system in balance. This helps you feel more energized, maintain focus, and perform at your very best.

ALVEN

Art: 100018

LED | CRI/Ra >90 | COMPLIANT WITH IEEE1789 | IP20 | RoHS

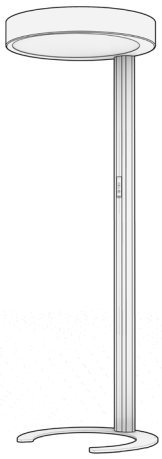

Lumen output
6400lm

LED color temperature
2700K-6500K

Connector
220V
Ethernet / Wifi / Bluetooth

Lifetime
L70B50: >100 000 h

Color
White

The different light settings of BrainLit Alven™ can be used throughout the day to maintain an individual's natural circadian rhythm, to receive an energy boost before an important meeting, or to unwind towards the end of a busy day.

BrainLit Alven™ is a multi-user system, so multiple employees can create accounts, download the BrainLit app, and enjoy the benefit of BioCentric Lighting™ by checking in or checking out of the system.

BRAINLIT APP & ONLINE PORTAL

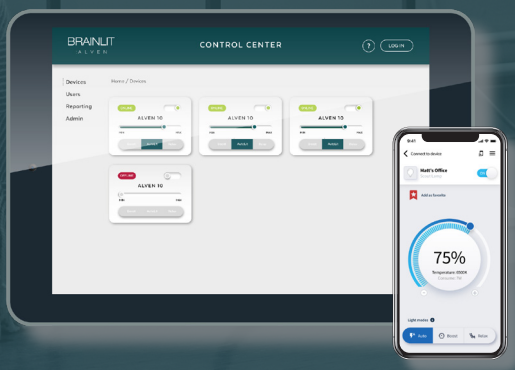

BrainLit App & Online Portal

Download the BrainLit app or log into the online control panel to control your BrainLit Alven™ and to further personalize your BioCentric Lighting™ experience.

Download on the App Store

Google play

Scanna QR koden för att ladda ner appen!


Eliminate >90%
of SARS-COV2
in 2 min[1]
Eliminate >99.9%
of SARS-COV2
in 12 min[1]

BRAINLIT
:UVEN

DISINFECTION THROUGH UV-C LIGHTING

The world we live in is uncertain and the recent pandemic has highlighted the fact that viruses and bacteria can live both in the air and on surfaces and thereby spread and affect our health. As we learn to live with these infection outbreaks there is demand for an efficient way to disinfect frequently visited public spaces to protect people from harmful pathogens. BrainLit is a Swedish health technology company with the aim to improve the quality of life for people through lighting.

Using our knowledge and experience in lighting we have developed a unique system that uses UV-C lighting to quickly, safely and automatically disinfect both air and surfaces to create a safe and healthy environment.

- ✓ **Safeguarding frequently visited environments with high degree of pathogens such as bathrooms, fitting rooms, conference rooms etc.**
- ✓ **Quick and automated disinfection**
- ✓ **Eliminates pathogens from both air and surfaces**
- ✓ **Manual disinfection using chemicals can be minimized**

WITH SAFETY IN MIND

Areas with no humans present are exposed to UV-C light for disinfection. When a safety sensor is triggered, it switches from UV-C light to BioCentric Lighting™. BrainLit UVen features different safety functionalities to ensure the UV-C light is only used in unoccupied spaces. Radar sensors, infrared sensors and door sensors are used, complementing each other, to ensure the space is unoccupied during disinfection.

BIOCENTRIC LIGHTING™

Brainlit Uven combines disinfecting UV-C lighting with healthy BioCentric Lighting™ to promote the safest possible environment for your customers and your personnel. BrainLit's BioCentric Lighting™ simulates the important aspects of daylight to promote circadian alignment by synchronizing our biological needs with the solar day, providing benefits such as increased alertness, better sleep and improved wellbeing.

UVEN

Art: 100021

LED | CRI/Ra >90 | COMPLIANT WITH IEEE1789 | IP20 | UV-C DISINFECTION | RoHS COMPLIANT

Power property **120-277V 50/60Hz, 50W+75W+20W**	Peak wavelength **260-280 nm**
LED color temperature **6500K-2700K**	FWHM **<40nm**
Lumen output **4000 lm**	Radiated power **450 mW**
Lifetime **L70 > 100 000 h**	Lifespan **10 000 h**

REFERENCES

1). R. Zhang et al. A circadian gene expression atlas in mammals: implications for biology and medicine. Proc Natl Acad Sci U S A 111, 16219-16224 (2014).

2). M. D. Ruben et al. A database of tissue-specific rhythmically expressed human genes has potential applications in circadian medicine. Sci Transl Med 10 (2018).

3). N.E. Klepeis et al. The national human activity pattern survey (NHAPS): a resource for assessing exposure to environmental pollutants. J Expo Anal Environ Epidemiol 11(3):231-52 (2001).

4). Center for Environmental Therapeutics. Consensus recommendations for optimum indoor lighting. https://cet.org/consensus-recommendations-for-optimum-indoor-lighting/. Access date 2021-10-20.

5). O. Osibona et al. Lighting in the Home and Health: A Systematic Review. Int J Environ Res Public Health 18(2), 609 (2021).

6). S. Wahl et al. The inner clock-Blue light sets the human rhythm. J Biophotonics. 12(12), (2019).

7). R. Méndez-Hernández et al. Suprachiasmatic Nucleus-Arcuate Nucleus Axis: Interaction Between Time and Metabolism Essential for Health. Obesity (Silver Spring). 28(1): 10-17 (2020)

8). R. Paganelli et al. Biological clocks: their relevance to immune-allergic diseases. Clin Mol Allergy 16(1), (2018).

9). A. Wirz-Justice et al. The relevance of daylight for humans. Biochemical Pharmacology 191, 114304 (2021).

10). T.T. Norton and J.T. Jr. Siegwart. Light levels, refractive development, and myopia--a speculative review. Exp Eye Res. 114:48-57 (2013).

11). MG Figueiro et al. The impact of daytime light exposures on sleep and mood in office workers. Sleep health (2017).

12). C.A. Hviid et al. A field study of the individual and combined effect of ventilation rate and lighting conditions on pupils' performance. Building and environment. 2020.

13). S. Andersson Eriksson and K. Wingren. Master thesis: The effect of a dynamic LED light intervention on sleep quality of adolescent students. Lund University. http://lup.lub.lu.se/student-papers/record/8876069 (2016).

14). B.K. Gehlbach et al. The effects of timed light exposure in critically ill patients: A randomized controlled pilot clinical trial. Am J Respir Crit Care Med 198(2), 275-278 (2018).

15). E. Facer-Childs, R. Brandstaetter, The impact of circadian phenotype and time since awakening on diurnal performance in athletes. Curr Biol 25, 518-522 (2015).

16.) Uven disinfection evaluation with SARS-CoV-2 plaque assay, Swedish Defence Research Agency, 2021

IMPROVING LIFE WITH BIOCENTRIC LIGHTING™

BRAINLIT

info@brainlit.com • www.brainlit.com
Scheelevägen 34, 223 63 Lund
+46 46 37 26 00

BLT / 1_01